DWARSPROFIEL 26

Km 1112.92m
Hsch 1/100
Lsch 1/100
Vvlak 9.00 T.A.W.

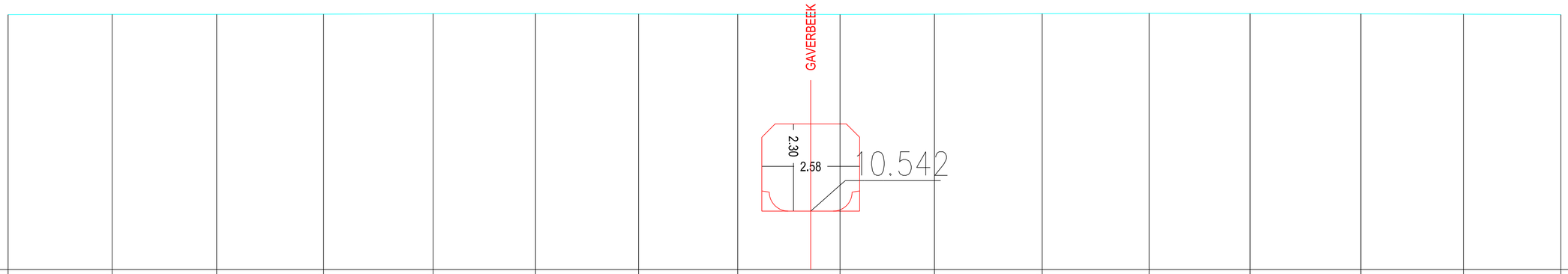

BODEMPEIL	15.731	15.736	15.737	15.743	15.755	15.756	15.748	15.740	15.732		15.741	15.755	15.768	15.759	15.752	15.742	15.731	
TUSSENAFSTAND	1.339	2.744	2.756	2.817	2.891	2.701	2.715	2.612	1.925	0.774	2.488	2.841	2.819	2.660	2.923	2.703	2.569	
KUMULAFSTAND	-21.161	-18.417	-15.661	-12.844	-9.953	-7.252	-4.537	-1.925	0.000	0.774	3.262	6.103	8.922	11.582	14.505	17.208	19.777	