DWARSPROFIEL 401

Hsch 1/100
Lsch 1/100
Vvlak 22m T.A.W.

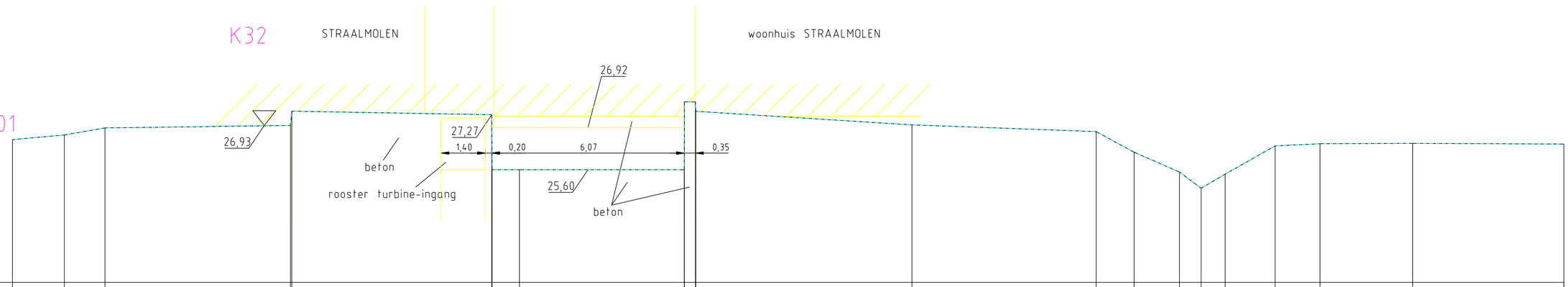

BODEMPEIL	26.49	26.64	26.86	26.98	27.27	25.55	25.68	27.88	26.95	26.74	26.09	25.47	24.96	25.40	26.29	26.36	26.37	26.35
SLIBBODEM	26.49	26.64	26.86	26.98	27.27	25.55	25.68	27.88	26.95	26.74	26.09	25.47	24.96	25.40	26.29	26.36	26.37	26.35
CUMULAFSTAND	-16.89	-15.26	-13.98	-0.10	-1.89	-0.93	0.00	4.27	4.63	11.44	17.24	18.44	19.87	20.55	21.31	22.88	24.30	27.21	31.98
TUSSENAFSTAND	1.63	1.28	5.84	0.04	6.30	0.00	0.86	0.93	4.27	0.00	0.31	6.81	5.80	1.20	1.43	0.68	0.76	1.57	1.42	2.92	4.76