103 P.K. 4.51738

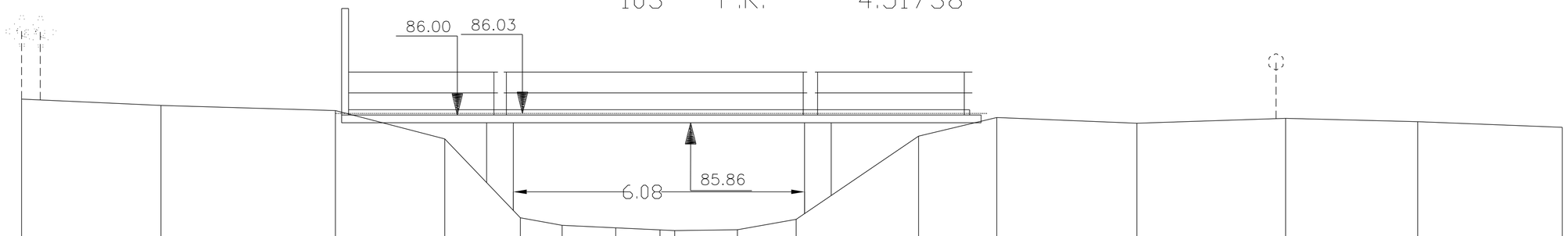

SCHALEN
H 1: 100.00
L 1: 100.00
R.V. 82.00

MATEN TERREIN	86.30	86.18	86.08	85.55	84.07	83.93	83.88	83.83	83.85	84.04	85.60	85.95	85.85	85.94	85.87	85.77
TUSSENAFST. TERREIN		2.61	3.27	2.05	1.42	0.78	1.01	1.11	1.18	1.10	2.30	1.47	2.63	2.79	2.48	2.71
GEKUM. AFST. TERREIN	-11.97	-9.36	-6.09	-4.04	-2.62	-1.84	-0.83	0.27	1.45	2.55	4.84	6.31	8.94	11.73	14.20	16.91