LEGENDE

HARDE BODEM
BEGIN BEGROEIING
AS RIVIER
SLIBBODEM

KRUISING AFSLUITING

KRUISING MUUR

KRUISING GEBOUW

BETON

METSELWERK

6903-751

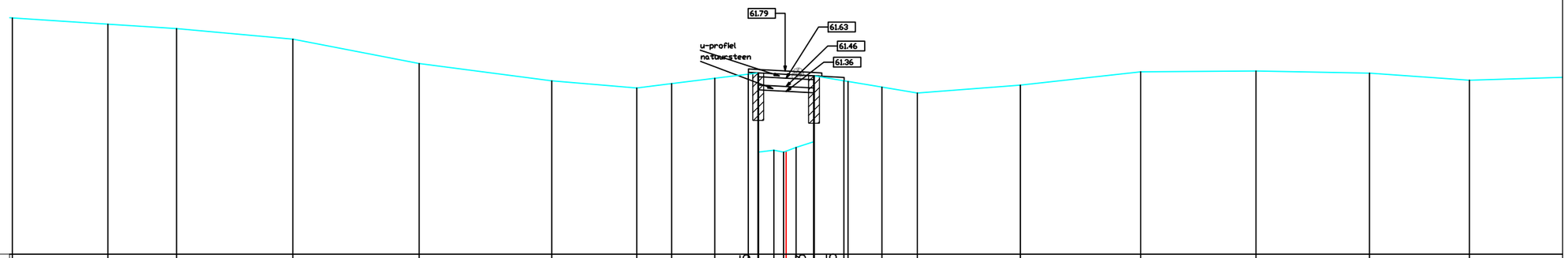


| | | | | | | | | | | | | | | | | | | | | | | | | |
|---|---|---|---|---|---|---|---|---|---|---|---|---|---|---|---|---|---|---|---|---|---|---|---|---|
| MATEN TERREIN | 62.75 | 62.66 | 62.44 | 61.94 | 61.58 | 61.43 | 61.52 | 61.63 | 61.76 | 61.75 | 60.11 | 60.15 | 60.11 | 60.26 | 60.33 | 61.62 | 61.65 | 61.57 | 61.45 | 61.33 | 61.49 | 61.77 | 61.78 | 61.74 | 61.59 | |
| TUSSENAFSTANDEN TERREIN | 1.98 | 1.42 | 2.41 | 2.61 | 2.74 | 1.76 | 0.72 | 0.89 | 0.69 | 0.01 | 0.49 | 0.05 | 0.20 | 0.26 | 0.37 | 0.30 | 0.62 | 0.09 | 0.70 | 0.73 | 2.13 | 2.49 | 2.38 | 2.35 | 2.06 | 2.75 |
| GEKUMULEERDE AFSTANDEN TERREIN | −14.02 | −12.60 | −10.19 | −7.59 | −4.84 | −3.09 | −2.37 | −1.47 | −0.78 | −0.58 | −0.25 | −0.05 | 0.20 | 0.46 | 0.83 | 0.58 | 1.19 | 1.28 | 1.98 | 2.71 | 4.84 | 7.33 | 9.71 | 12.06 | 14.12 | |
| MATEN SLIB | | | | | | | | | | | | | | | | | | | | | | | | | | |
| TUSSENAFSTANDEN SLIB | | | | | | | | | | | | | | | | | | | | | | | | | | |
| GEKUMULEERDE AFSTANDEN SLIB | | | | | | | | | | | | | | | | | | | | | | | | | | |

**Gemeente Beersel**

**B1022** **Molenbeek**

**VHAG:6903**

**Locatie atlaspunt (LB72):** **X-coördinaat:147237,5527 Y-coördinaat:158728,3137**

**DWARSPROFIELPLAN**

**Atlaspunt** 265
**Datum opmeting:1/09/2001**
**Schaal:** **1/100**

VLAAMS-BRABANT